Environmental Specifications

Item		Specification	Note
Storage temperature		-25°~70°C	
Operating ambient temperature		0°~55°C	
Relative humidity		5~95%	Non-condensing, RH-2
Pollution resistance		Degree II	
Corrosion resistance		Based on IEC-68 standard	
Altitude		≤2000m	
Vibration resistance	Fixd by DIN rail	0.5G, 2 hours for each direction of 3 axes	
	Fasten by screw	2G, 2 hours for each direction of 3 axes	
Shock resistance		10G, three times for each direction of 3 axes	
Noise resistance		1500Vp-p, pulse width 1μS	
Withstand voltage		500VAC, 1 minute (DC)	L, N to any terminal
		1500VAC, 1 minute (AC)	

DC Model Power Specifications

Specification / Item	10/14 Points Main Unit	20/24 Points Main Unit	32/40 Points Main Unit	60 Points Main Unit
Input voltage	24VDC,-15%/+20%			
Max. power capability	2.5W/3W	3.5W/4W	4.5W/5W	6W
Inrush current	20A@24VDC			
Allowable power momentary interruption time	<2ms			
Fuse rating	2A,125VDC			

AC Model Power Specifications (custom products)

Specification / Item	10/14 Ponits Main Unit	20/24 Ponits Main Unit	32/40 Ponits Main Unit	60 Ponits Main Unit
Input power/Frequency	85 ~ 264VAC / 50 ~ 60Hz			
Max. power capability (Built-in sensor power supply)	21W			
Inrush current	20A@264VAC			
Allowable power momentary interruption time	<20mS			
Fuse rating	2A, 250VAC			

Main Unit Specifications

*1 : Default, changeable by user
*2 : LAIO and L4NTC module will occupy Port1

Specification / Item				MB1	MB1z	Note
Execution speed				0.33uS ／ Sequential instruction		
Memory capacity		Program (Word)		7936 Words	3840 Words	
		Comment (Byte)		8K Bytes	4K Bytes	
Program memory				FLASH ROM or SRAM+Lithium battery Back-up		
Sequential instruction				36 instructions		
Function instruction				326 instructions(126 kinds)	323 instructions(123 kinds)	Include derivative instructions
Flow chart command (SFC)				4 instructions		
Communication Interface	Port0 (RS232) Speed 4.8k~115.2kbps			Built- in		Default setting of each port is 906 kbps, Port1~2 provides MERITEK or Modbus RTU/ASCII or user defined communication protocol
	Port1~2 (RS232, RS485, Ethernet) Speed 4.8k~921.6kbps			Expandable Port1 and Port2	Built-in Port2(RS485) No expandable	
	Maximum link stations			254		
Digital (Bit status)	X	Input contact (DI)		X+Y=128	6 / 8 / 12 / 14 / 20 / 24 / 36	Corresponding to external digital input
	Y	Output relay (DO)			4 / 6 / 8 / 10 / 12 / 16 / 24	Corresponds to external digital output
	TR	Temporary relay		TR0~TR39 (40)		
	M	Internal relay	Non-retentive	M0~M799 (800)*1		Can be configured as retentive type
				M1400~M1911 (512)		
			Retentive	M800~M1399 (600)*1		Can be configured as non-retentive
		Special relay		M1912~M2001 (90)		

(Continue)

Specification / Item				MB1	MB1z	Note
Digital (Bit status)	S	Step relay	Non-retentive	S0~S499 (500)*1		S20~S499 can be configures as retentive type
			Retentive	S500~S999 (500)*1		Can be configures as non-retentive type
	T	Timer "Time-Up" status contact		T0~T255 (256)		
	C	Counter "Count-Up" status contact		C0~C255 (256)		
Register (Word data)	TMR	Time current value register	0.01S Time base	T0~T49 (50)*1		T0~T255 members for each time base can be adjusted
			0.1S Time base	T50~T199 (150)*1		
			1S Time base	T200~T255 (56)*1		
	CTR	Counter current value register 16-bit	Retentive	C0~C139 (140)*1		Can be configured as non-retentive type
			Non-retentive	C140~C199 (60)*1		Can be configured as retentive type
		Counter current value register 32-bit	Retentive	C200~C239 (40)*1		Can be configured as non-retentive type
			Non-retentive	C240~C255 (16)*1		Can be configured as retentive type
	HR DR	Data register	Retentive	R0~R2999 (3000)*1		Can be configured as non-retentive type
				D0~D3999 (4000)		
				R5000~R8071 (3072)*1		When not configured as ROR, it can serve normal register (for read/write)
			Non-retentive	R3000~R3839 (840)*1		Can be configured as retentive type
	ROR		Read only register	R5000~R8071 can be set as ROR, default setting is (0)*1		ROR is stored in special ROR area and not occupy program space
	FR		File register	F0~F8191 (8192)		Saved/retrieved via dedicated instruction
	IR	Input register		R3840~R3857 (18)	–	Corresponding to the external numerical input
	OR	Output register		R3904~R3921 (18)	–	Corresponding to the external numerical output
	SR	Special system register		R3968~R4167 (200)		
				D4000~D4095 (96)		D4072~4075(4)corresponds LAIO Module inputs*2 D4076~4077(4)corresponds LAIO Module outputs*2
		0.1mS High-speed timer register		R4152~R4154 (3)		
		High-speed counter register	Hardware(4 sets)	DR4096~DR4110 (4x4)		
			Software(4sets)	DR4112~DR4126 (4x4)		
		Calendar register		R4128 (sec) R4129 (min) R4130 (hour) R4131 (day) R4132 (month) R4133 (year) R4134 (week)	–	
	XR	Index register		V、Z (2), P0~P9 (10)		
Interrupt control		External interrupt control		32 interrupts(16 points input positive/negative edge)		Only main unit input points
		Internal interrupt control		8 interrupts (1、2、3、4、5、10、50、100mS)		
0.1mS high-speed timer				1(16-bit), 4(32-bit, share with HHSC)		
High-speed counter HSC		Hardware high-speed counter (HHSC)/32-bit	No. of channel	Up to 4		Total number of HHSC and SHSC is 8 HHSC can be converted into 32-bit/0.1mS time base High-Speed Timer(HST) Half of maximum frequency while A/B phase input
			Counting mode	8 modes (U/D、U/Dx2、P/R、P/Rx2、A/B、A/Bx2、A/Bx3、A/Bx4)		
			Counting frequency	Maximum is 50KHz (Singled-end input)		
		Software high-speed counter(SHSC)/32-bit	No. of channel	Up to 4		
			Counting mode	3 modes (U/D、P/R、A/B)		
			Counting frequency	Maximum sum up to 5KHz		
NC position pulse output (HSPSO)		Number of axis		Up to 4		
		Output frequency		Maximum is 50KHz (Singled-end input)		Half of the maximum while A/B phase output
		Pulse output mode		3 modes (U/D、P/R、A/B)		
		Programming method		Dedicated position language		
		Interpolation		Maximum 4 axes linear interpolation		
HSPWM output		Number of points		Up to 4		
		Output frequency		72Hz~18.432KHz (with 0.1%resolution) 720Hz~184.3KHz(with 1%resolution)		
Captured input		Points		Maximum 36 points (All inputs in main unit come with this feature)		
		Minimum captured pulse width		>10μS (for Ultra high/high speed input)		
				>47μS (for medium speed input)		
				>470μS (for medium/low speed input)		
Digital filter			X0～X15	Adjustable frequency 14KHz~1.8MHz		Chosen by frequency at high frequency
				Adjustable time constant 0.1~1.5mS/1~15mS(unit: 0.1mS/1mS)		Chosen by time constant at low frequency
			X16～X35	Time constant 1~15mS adjustable(unit: 1mS)		

Digital Input (DI) Specification

* : Half of maximum frequency while A/B phase input

Specification \ Item		Main Unit			Extension module	Note
		High speed(HHSC)	Medium speed (SHSC)	Low speed (≥ X16)	Low speed	
Maximum input frequency		50KHz*	Total 5KHz	–	–	HHSC: Hardware High speed counter SHSC: Software High speed counter
Input signal voltage		24VDC±10%				
Threshold current	ON	> 4mA		> 2.3mA		
	OFF	< 1.5mA		< 0.9mA		
Maximum input current		7.6mA		4.5mA		
Input status indication		Displayed by LED: light when "ON", dark when "OFF"				
Isolation method		Optical isolation, 500VAC, 1 minute				
SINK/SOURCE selection		Select by wiring methods (internal common terminal S/S and external common wiring)				
Noise filtering methods		AHF(0.42us)+DHF(14KHz~1.8MHz or 0.1~15ms)		AHF(0.2ms)+DHF(1~15ms)	AHF(1mS)	DHF: Digital Hardware Filter AHF: Analog Hardware Filter

Wiring of 24VDC single-end SINK input

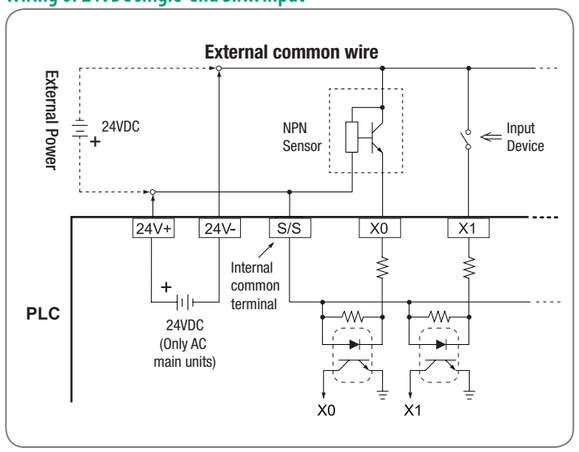

Wiring of 24VDC single-end SOURCE input

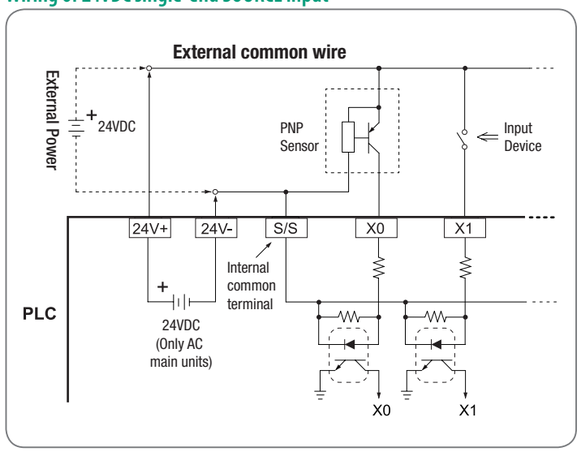

Digital Output (DO) Specifications

* : Half of maximum frequency while A/B phase output

Specification \ Item		High speed transistor output (Main unit HSPSO)	Low speed transistor output	Single-end relay output	Note
Maximum output frequency		50KHz*	—	—	HSPSO：Hardware High Speed Pulse Output
Working voltage		5~30VDC		<250VAC/30VDC	
Maximum load current	Resistive	0.3A/0.1A (M4T/J)	0.5A	2A/single, 4A/common	
	Inductive			80VA(AC)/24VA(DC)	
Maximum voltage drop/conducting resistance (initial)		0.5V	1V	30mΩ (@1A, 6VDC)	
Minimum load		—		2mA/DC power	
Leakage current		< 0.1mA/30VDC		—	
Maximum output delay time	ON → OFF	15μS		10mS	
	OFF → ON	30μS			
Output status indication		Displayed by LED: light when "ON", dark when "OFF"			
Isolation method		Optical isolation, 500VAC, 1 minute		Electromagnetic isolation 1500VAC, 1 minute	

Wiring of relay single-end output

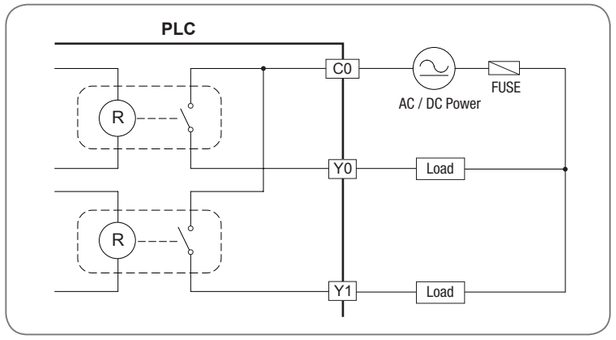

Wiring of transistor single-end SINK output

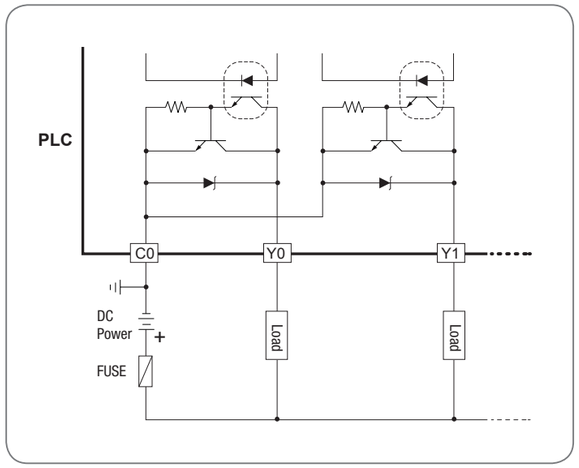

Wiring of transistor single-end SOURCE output

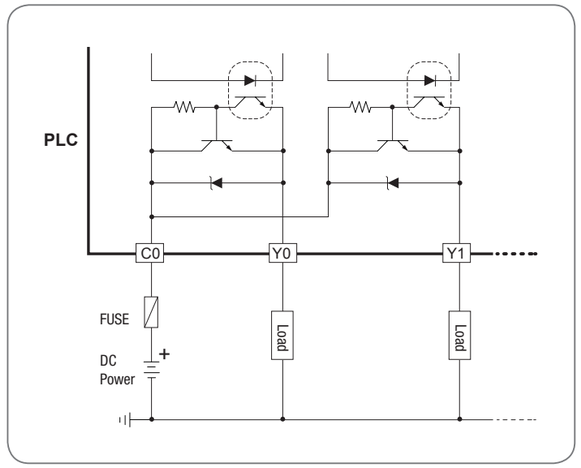

Wiring of M4T main unit Y0~Y7 transistor single-end SINK output

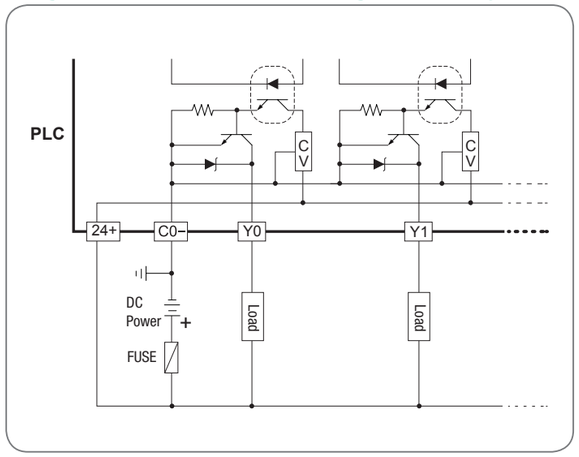

Wiring of M4J main unit Y0~Y7 transistor single-end SOURCE output

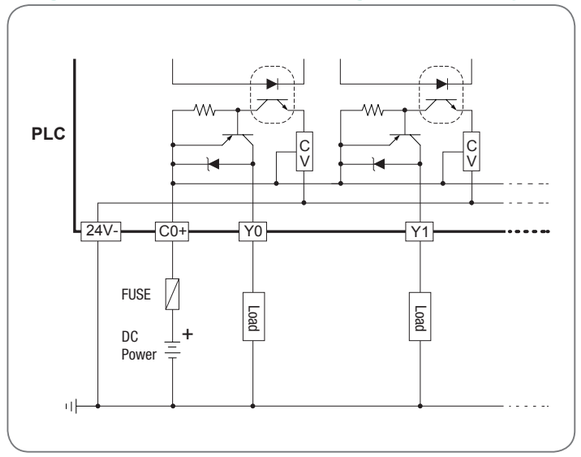

Model Specification

MB1z Main Units

Spec. \ Model			MB1z-10MR	MB1z-10M(T/J)	MB1z-14MR	MB1z-14M(T/J)	MB1z-20MR	MB1z-20M(T/J)	MB1z-24MR	MB1z-24M(T/J)
Digital input	24VDC	High speed (50KHz)	4 points (2-axis single phase or A/B phase)				6 points (3-axis single phase or A/B phase)		8 points (4-axis single phase or A/B phase)	
		Medium (Total 5KHz)	2 points		4 points		6 points		6 points	
		Low speed	—		—		—		—	
Digital Output	Relay		4 points	—	6 points	—	8 points	—	10 points	—
	Transistor (5~30 VDC)	High speed (50KHz)	—	2 points (1-axis single phase or A/B phase)	—	2 points (1-axis single phase or A/B phase)	—	4 points (2-axis single phase or A/B phase)	—	4 points (2-axis single phase or A/B phase)
		Low speed	—	2 points	—	4 points	—	4 points	—	6 points
Communication port		Built-in	2 ports (Port0:RS232, Port2:RS485)							
		Expandable	—							
Calendar			—							
Wiring mechanism			5mm European fixed terminal block							
Dimension			Figure 1 (Standard), Figure 2 (Slim)				Figure 3 (Standard), Figure 4 (Slim)			

(Continue)

Spec. \ Model			MB1z-32MR	MB1z-32M(T/J)	MB1z-40MR	MB1z-40M(T/J)	MB1z-60MR	MB1z-60M(T/J)
Digital input	24VDC	High speed (50KHz)	8 points (4-axis single phase or A/B phase)					
		Medium speed (Total 5KHz)	8 points					
		Low speed	4 points		8 points		20 points	
Digital Output	Relay		12	—	16	—	24	—
	Transistor (5~30 VDC)	High speed (50KHz)	—	6 points (3-axis single phase or A/B phase)	—	6 points (3-axis single phase or A/B phase)	—	8 points (4-axis single phase or A/B phase)
		Low speed	—	6 points	—	10 points	—	16 points
Communication port		Built-in	2 ports (Port0:RS232, Port2:RS485)					
		Expandable	—					
Calendar			—					
Wiring mechanism			5mm European fixed terminal block					
Dimension			Figure 5 (Standard), Figure 6 (Slim)				Figure 7 (Standard), Figure 8 (Slim)	

B1 Main Units

Spec. \ Model			MB1-10MR	MB1-10M(T/J)	MB1-14MR	MB1-14M(T/J)	MB1-20MR	MB1-20M(T/J)	MB1-24MR	MB1-24M(T/J)
Digital input	24VDC	High speed (50KHz)	4 points (2-axis single phase or A/B phase)				6 points (3-axis single phase or A/B phase)		8 points (4-axis single phase or A/B phase)	
		Medium (Total 5KHz)	2 points		4 points		6 points		6 points	
		Low speed	—		—		—		—	
Digital Output	Relay		4 points	—	6 points	—	8 points	—	10 points	—
	Transistor (5~30 VDC)	High speed (50KHz)	—	2 points (1-axis single phase or A/B phase)	—	2 points (1-axis single phase or A/B phase)	—	4 points (2-axis single phase or A/B phase)	—	4 points (2-axis single phase or A/B phase)
		Low speed	—	2 points	—	4 points	—	4 points	—	6 points
Communication port		Built-in	1 port (Port0:RS232)							
		Expandable	2 ports (Port1~2,RS485 or RS232 or Ethernet)							
Calendar			Built-in							
Wiring mechanism			5mm European fixed terminal block							
Dimension			Figure 1 (Standard), Figure 2 (Slim)				Figure 3 (Standard), Figure 4 (Slim)			

(Continue)

Spec. \ Model			MB1-32MR	MB1-32M(T/J)	MB1-40MR	MB1-40M(T/J)	MB1-60MR	MB1-60M(T/J)
Digital input	24VDC	High speed (50KHz)	8 points (4-axis single phase or A/B phase)					
		Medium (Total 5KHz)	8 points					
		Low speed	4 points		8 points		20 points	
Digital Output	Relay		12	—	16	—	24	—
	Transistor (5~30 VDC)	High speed (50KHz)	—	6 points (3-axis single phase or A/B phase)	—	6 points (3-axis single phase or A/B phase)	—	8 points (4-axis single phase or A/B phase)
		Low speed	—	6 points	—	10 points	—	16 points
Communication port		Built-in	1port (Port0:RS232)					
		Expandable	2 ports (Port1~2,RS485 or RS232 or Ethernet)					
Calendar			Built-in					
Wiring mechanism			5mm European fixed terminal block					
Dimension			Figure 5 (Standard), Figure 6 (Slim)				Figure 7 (Standard), Figure 8 (Slim)	

MB1 4-axis NC Positioning Main Units

Spec. \ Model			MB1-24M4T/J*	MB1-40M4T/J*
Digital input	24VDC	High speed (50KHz)	8 points (4-axis single phase or A/B phase)	
		Medium (Total 5KHz)	6 points	8 points
		Low speed	—	8 points
Digital Output	Transistor (5~30 VDC)	High speed (50KHz)	8 points (4-axis single phase or A/B phase)	
		Low speed	2 points	8 points
Communication port		Built-in	1 port (Port0:RS232)	
		Expandable	2 ports (Port1~2,RS485 or RS232 or Ethernet)	
Calendar			Built-in	
Wiring mechanism			5mm European fixed terminal block	
Dimension			Figure 3 (Standard), Figure 4 (Slim))	Figure 5 (Standard), Figure 6 (Slim))

*J : Customized product

Left Side Communication Expansion Modules

Spec. \ Model	MB1-CM25E	MB1-CM55E
Network interface	10 Base T	
Network protocol	TCP, UDP, ICMP, ARP	
Application protocol	MERITEK client and server mode, Modbus-TCP server mode	
PLC interface	Port 2	
PLC communication speed	9.6K / 19.2K / 38.4K / 57.6K / 115.2 K / 230.4 K	
Expansion communication interface	RS232 (Port1) RS485 (Port2)	RS485 (Port1, Port2)
Application IP port number	MERITEK port number 500, Modbus-TCP 502 or customized	
Security protection	IP based access control	
Indicators	Internet RX, TX, LINK LEDs indicators	
Wiring mechanism	RJ45, 3-pin spring terminal block, DB9F	RJ45, 3-pin spring terminal block
Dimension	Figure 11 (Standard only)	

(Continue)

Spec. \ Model	MB1-CM2	MB1-CM22	MB1-CM5	MB1-CM55	MB1-CM25
Communication interface	RS232(2)	RS232(1,2)	RS485(2)	RS485(1,2)	RS232(1)+RS485(2)
Communication status	Receive (RX) : Green LED, Transmit (TX) : Red LED				
Wiring mechanism	DB9F	DB9F	3-pin spring terminal block		DB9F，3-pin spring terminal block
Dimension	Figure 11(Standard), Figure 12 (Slim)				

Left Side Temperature/Analog I/O Expansion Modules

Spec. \ Model	MB1-L4AD	MB1-L2DA	MB1-L2A2D	MB1-L4NTC
Number of channels	4 channel input	2 channel output	2 channel input ＋ 2 channel output	4 channel temperature input
Resolution	12 bits			
Input / Output signal range	0~10V(voltage)，0~20mA(current)			100Ω ~ 100KΩ
Maximum resolution	2.44mV(voltage)，4.88μA(current)			—
Accuracy	±1%			
Conversion time	Conversion once for each scan			
Maximum input signal	±15V(voltage)，30mA(current)			—
Input impedance / Output load	Input impedance 100KΩ (voltage),125Ω (current) / Output load：2K~1MΩ (voltage),0~500Ω (current)			—
Isolation method	Non-isolation			
Wiring mechanism	3.81mm European fixed terminal block			
Dimension	Figure 13(Standard), Figure 14 (Slim)			Figure 13(Standard)

Right Side Digital I/O Expansion Modules

Spec. \ Model			MB1-4YR	MB1-4Y(T/J)	MB1-8X	MB1-8YR	MB1-8Y(T/J)	MB1-8XYR	MB1-8XY(T/J)
Digital input	24VDC	Low speed	—	—	8	—	—	4	4
Digital output	Relay	2A	4	—	—	8	—	4	—
	Transistor	0.5A	—	4	—	—	8	—	4
Wiring mechanism			5mm European fixed terminal block						
Dimension			Figure 9 (Standard), Figure 10 (slim)						

(Continue)

Spec. \ Model			MB1-16X	MB1-16YR	MB1-16Y(T/J)	MB1-16XYR	MB1-16XY(T/J)	MB1-24XYR	MB1-24XY(T/J)
Digital input	24VDC	Low speed	16	—	—	8	8	14	14
Digital output	Relay	2A	—	16	—	8	—	10	—
	Transistor	0.5A	—	—	16	—	8	—	10
Wiring mechanism			5mm European fixed terminal block						
Dimension			Figure 1 (Standard), Figure 2 (slim)					Figure 3 (Standard), Figure 4 (slim)	

(Continue)

Spec. \ Model			MB1-40XYR	MB1-40XY(T/J)	MB1-60XYR	MB1-60XY(T/J)
Digital input	24VDC	Low speed	24	24	36	36
Digital output	Relay	2A	16	—	24	—
	Transistor	0.5A	—	16	—	24
Wiring mechanism			5mm European fixed terminal block			
Dimension			Figure 5 (Standard), Figure 6 (slim)		Figure 7 (Standard), Figure 8 (slim)	

Right side Analog I/O Expansion Modules

Spec. \ Model		MB1-6AD	MB1-2DA
Input point		6 points input	2 points output
Input/Output value		12 bit	
Maximum resolution		1.22mV(Voltage),2.44μA(Current)	
Input/Output signal range	Voltage	-10 ~ +10V, -5 ~ +5V, 0 ~ 10V, 0~5V	
	Current	-20 ~ +20mA, -10 ~ +10mA, 0 ~ 20mA, 0 ~ 10mA	
Accuracy		±1%	
Input impedance		63.2KΩ(Voltage) 250Ω(Current)	—
Conversion time		Conversion once for each scan	
Maximum input signal		±12V(Voltage) ±24mA(Current)	—
Allowable load range		—	500 ~ 1MΩ(Voltage) 0 ~ 500Ω(Current)
Isolation method		Non-isolation	
Wiring mechanism		3.81mm European fixed terminal block	
Dimension		Figure 9 (Standard), Figure 10 (slim)	

Right side Temperature Measurement Expansion Modules

Spec. \ Model	MB1-2TC/6TC	MB1-6RTD
Number of input points	2 /6 points	6 points
Sensor type and temperature measurement range	J (-200~1200°C) E (-190~1000°C) K (-190~1300°C) T (-190~380°C) R (0~1800°C) B (350~1800°C) S (0~1700°C) N (-200~1000°C)	3-wire RTD sensor (JIS or DIN) Pt100(-200~850°C) Pt1000(-200~600°C)
Temperature compensation	Built-in cold junction compensation	—
Resolution	0.1°C	
Temperature refresh time	Conversion once for each scan	
Overall Precision	± (1%+1°C)	± 1%
Isolation method	Transform (power) and optical (signal) isolation, 500VAC, 1 minute, no isolation between each channel	
Power consumption	24VDC -15%/+20%,2W max.	
Wiring mechanism	3.81 mm European fixed terminal block	
Dimension	Figure 9 (Standard)	

MBs Compatible Peripheral (Refer to MBs-PLC Catalog for Detail Specifications)

Memory Pack	PWMDA Module	RFID card	Simple HMI	General Purpose Communication Converter		
MBs-PACK	PWMDA	CARD-H	MBs-PEP/PEPR	MBs-CM25C	MBs-CM5R	MBs-CM5H

Bluetooth Communication Module	USB Converter Cable	Port 0 Communication Cables			
MBs-B2C	MBs-U2C-MD-180	MBs-232P0-9F-150	MBs-232P0-9M-400	MBs-232P0-MD-200	MBs-232P0-MDR-200

DC24V Power Supply

1A	2A	3A	4A	5A	6A
ADP-24V-1A	ADP-24V-2A	ADP-24V-3A	ADP-24V-4A	ADP-24V-5A	ADP-24V-6A

Dimensions

MERITEK
Automation reliable & smart

Figure 1 10/14 points main units or expansion modules (standard)

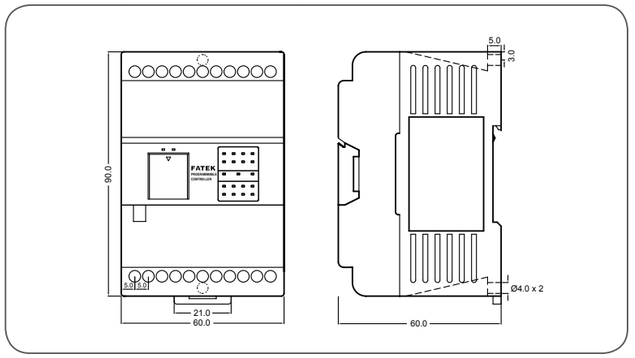

Figure 2 10/14 points units or expansion modules (slim)

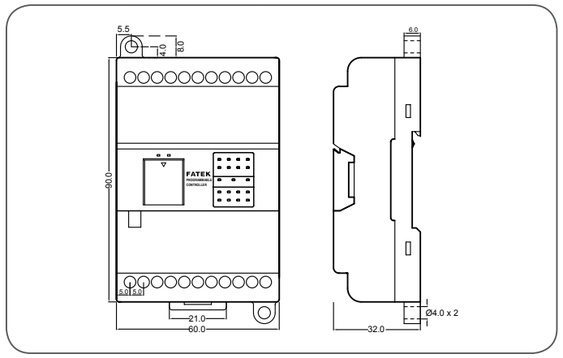

Figure 3 20/24 points main units or expansion modules (standard)

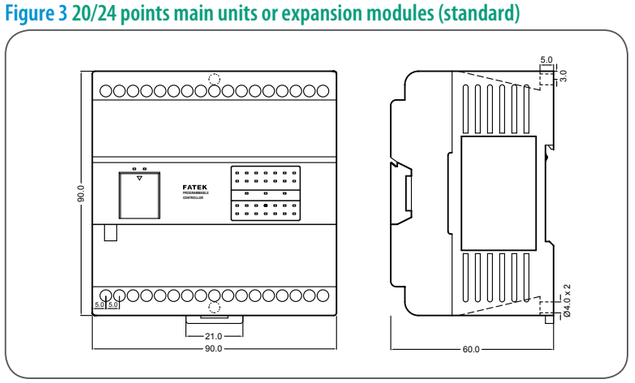

Figure 4 20/24 points main units or expansion modules (slim)

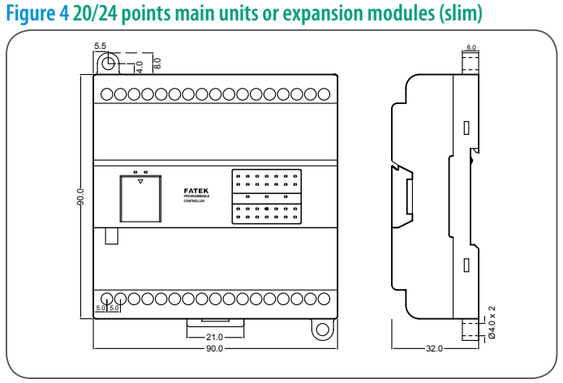

Figure 5 32/40 points main units or expansion modules (standard)

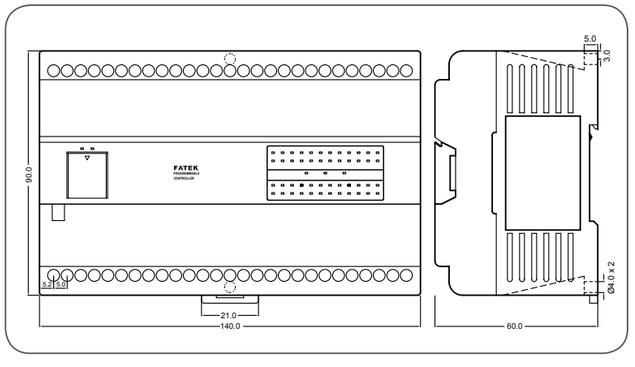

Figure 6 32/40 points main units of expansion modules (slim)

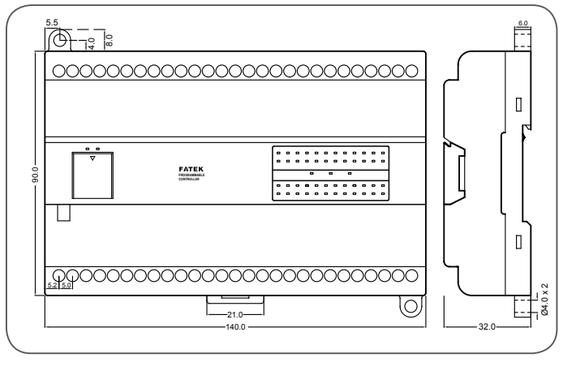

Figure 7 60 points main unit or expansion modules (standard)

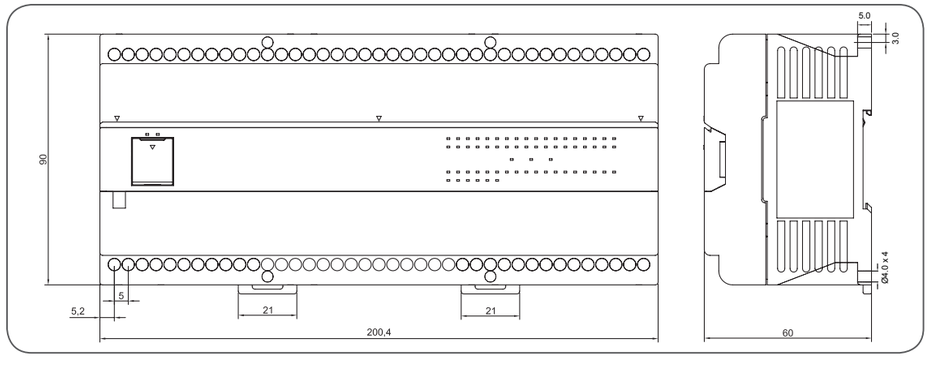

Figure 8 60 points main unit or expansion modules (Slim)

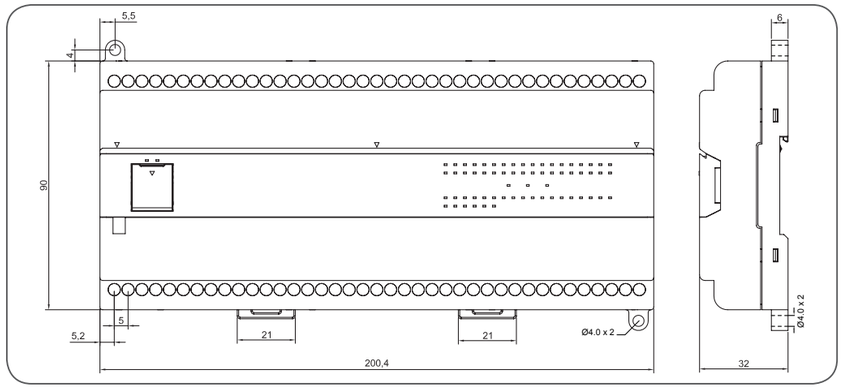

Figure 9 Right-side expansion (Standard)

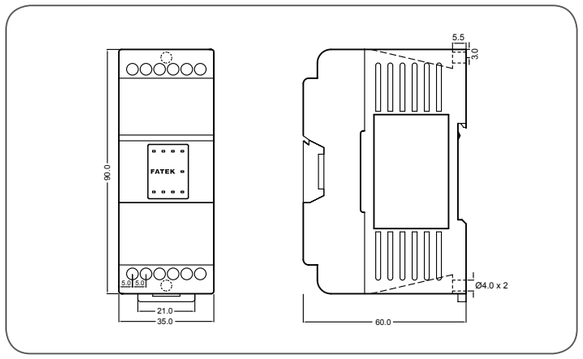

Figure 10 Right-side expansion (Slim)

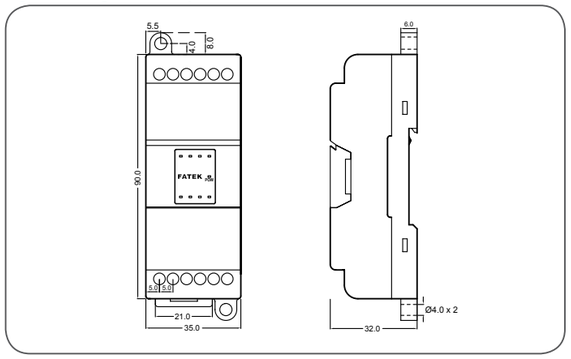

Figure 11 Left-side expansion (Standard)

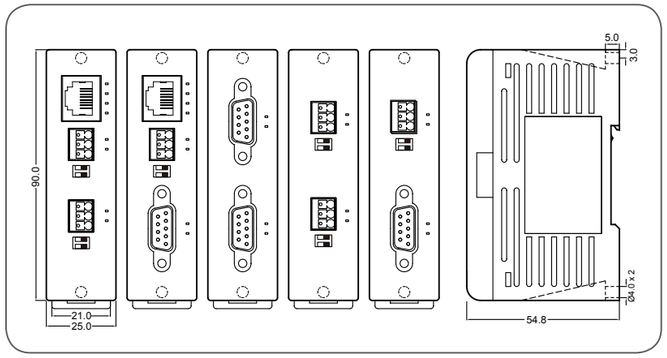

Figure 12 Left-side expansion (Slim)

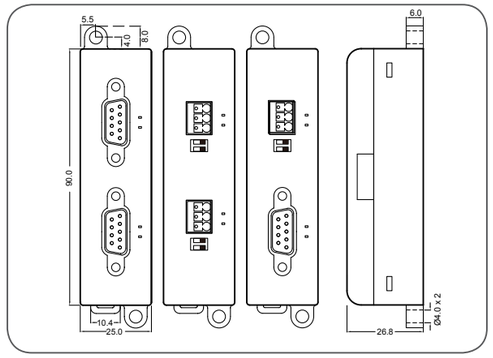

Figure 13 Left-side expansion (Standard)

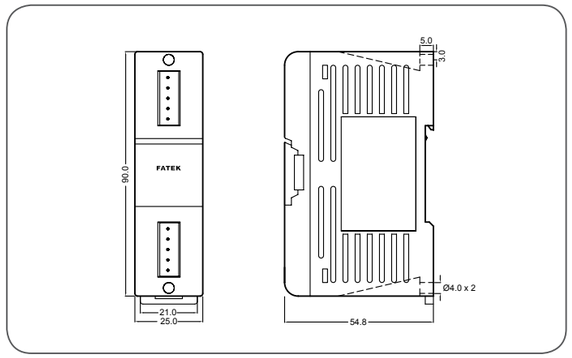

Figure 14 Left-segment expansion (Slim)

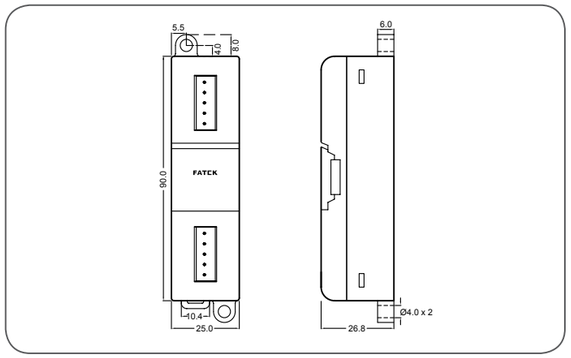

Model List

MERITEK
Automation reliable & smart

Item Name		Module	Specifications
Main Units	MB1z M ts	MB1z-10M◇ 25– ◎☆	6 points 24VDC digital input (4 points 50 KHz, 2 points total 5KHz), 4 points relay output or transistor output (2 points 50KHz), RS232(Port 0)+RS485(Port 2) communication ports, both sides are not expandable
		MB1z-14M◇ 25– ◎☆	8 points 24VDC digital input (4 points 50 KHz, 4 points total 5KHz), 6 points relay output or transistor output (2 points 50KHz), RS232(Port 0)+RS485(Port 2) communication ports, both sides are not expandable
		MB1z-20M◇ 25– ◎☆	12 points 24VDC digital input (6 points 50 KHz, 6 points total 5KHz), 8 points relay output or transistor output (4 points 50KHz), RS232(Port 0)+RS485(Port 2) communication ports, both sides are not expandable
		MB1z-24M◇ 25– ◎☆	14 points 24VDC digital input (8 points 50 KHz, 6 points total 5KHz), 10 points relay output or transistor output (4 points 50KHz), RS232(Port 0)+RS485(Port 2) communication ports, both sides are not expandable
		MB1z-32M◇ 25– ◎☆	20 points 24VDC digital input (8 points 50 KHz, 8 points total 5KHz), 12 points relay output or transistor output (6 points 50KHz), RS232(Port 0)+RS485(Port 2) communication ports, both sides are not expandable
		MB1z-40M◇ 25– ◎☆	24 points 24VDC digital input (8 points 50 KHz, 8 points total 5KHz), 16 points relay output or transistor output (6 points 50KHz), RS232(Port 0)+RS485(Port 2) communication ports, both sides are not expandable
		MB1z-60M◇ 25– ◎☆	36 points 24VDC digital input (8 points 50 KHz, 8 points total 5KHz), 24 points relay output or transistor output (8 points 50KHz), RS232(Port 0)+RS485(Port 2) communication ports, both sides are not expandable
	MB1 M its	MB1-10M◇ 2– ◎☆	6 points 24VDC digital input (4 points 50 KHz, 2 points total 5KHz), 4 points relay output or transistor output (2 points 50KHz), RS232(Port 0) communication port
		MB1-14M◇ 2– ◎☆	8 points 24VDC digital input (4 points 50 KHz, 4 points total 5KHz), 6 points relay output or transistor output (2 points 50KHz), RS232(Port 0) communication port
		MB1-20M◇ 2– ◎☆	12 points 24VDC digital input (6 points 50 KHz, 6 points total 5KHz), 8 points relay output or transistor output (4 points 50KHz), RS232(Port 0) communication port
		MB1-24M◇ 2– ◎☆	14 points 24VDC digital input (8 points 50 KHz, 6 points total 5KHz), 10 points relay output or transistor output (4 points 50KHz), RS232(Port 0) communication port
		MB1-32M◇ 2– ◎☆	20 points 24VDC digital input (8 points 50 KHz, 8 points total 5KHz), 12 points relay output or transistor output (6 points 50KHz), RS232(Port 0) communication port
		MB1-40M◇ 2– ◎☆	24 points 24VDC digital input (8 points 50 KHz, 8 points total 5KHz), 16 points relay output or transistor output (6 points 50KHz), RS232(Port 0) communication port
		MB1-60M◇ 2– ◎☆	36 points 24VDC digital input (8 points 50 KHz, 8 points total 5KHz), 24 points relay output or transistor output (8 points 50KHz), RS232(Port 0) communication port
	4-axis NC positioning Modules	MB1-24M4(T/J)2–D24☆	14 points 24VDC digital input (8 points 50 KHz, 6 points total 5KHz), 10 points transistor output (8 points 50KHz, 0.1A), RS232(Port 0) communication port, J is custom product
		MB1-40M4(T/J)2–D24☆	24 points 24VDC digital input (8 points 50 KHz, 8 points total 5KHz), 16 points transistor output (8 points 50KHz, 0.1A), RS232(Port 0) communication port, J is custom product
Left Side Expansion Module	Communication Modules	MB1-CM25E	1 port RS232 (Port 1) + 1 port RS485 (Port 2) + Ethernet network interface communication module
		MB1-CM55E	2 ports RS485 (Port 1, Port 2) + Ethernet network interface communication module
		MB1-CM2☆	1 port RS232 (Port 2) communication module
		MB1-CM22☆	2 port RS232 (Port1, Port2) communication module
		MB1-CM5☆	1 port RS485 (Port 2) communication module
		MB1-CM55☆	2 port RS485 (Port1, Port2) communication module
		MB1-CM25☆	1 port RS232 (Port 1) + 1 port RS485 (Port 2) communication module
	LAIO Modules	MB1-L2DA☆	Non-isolated 2 channels, 12-bit analog output module (0~10V or 0~20mA)
		MB1-L4AD☆	Non-isolated 4 channels, 12-bit analog input module (0~10V or 0~20mA)
		MB1-L2A2D☆	Non-isolated 2channels, 12-bit analog input + 2 channels, 12-bit analog output combo analog module (0~10V or0~20mA)
	Temperature Modules	MB1-L4NTC☆	4 channels, NTC temperature input module, 12-bit resolution, measuring range 100Ω~100KΩ
Right Side Expansion Module	DIO Expansion Modules	MB1-4Y◇☆	4 points relay or transistor output
		MB1-8X☆	8 points 24VDC digital input
		MB1-8Y◇☆	8 points relay or transistor output
		MB1-8XY◇☆	4 points 24VDC digital input, 4 points relay or transistor output
		MB1-16X☆	16 points 24VDC digital input
		MB1-16Y◇☆	16 points relay or transistor output
		MB1-16XY◇☆	8 points 24VDC digital input, 8 points relay or transistor output
		MB1-24XY◇☆	14 points 24VDC digital input, 10 points relay or transistor output
		MB1-40XY◇☆	24 points 24VDC digital input, 16 points relay or transistor output
		MB1-60XY◇☆	36 points 24VDC digital input, 24 points relay or transistor output
	AIO Modules	MB1-6AD☆	Non-isolated 6 channels, 12-bit analog input module (Voltage:-10~10V,-5~5V,0~5V Current: -20~20mA,-10~10mA,0~20mA,0~10mA)
		MB1-2DA☆	Non-isolated 2 channels, 12-bit analog output module (Voltage:-10~10V,-5~5V,0~5V Current: -20~20mA,-10~10mA,0~20mA,0~10mA)
	Temperature Modules	MB1-2/6TC	2/6 channels, thermocouple temperature input module with 0.1°C resolution, J, K, R, S, E, T, B, N thermocouple sensor
		MB1-6RTD	6 channels, RTD temperature input module with 0.1°C resolution, 3-wire RTD sensor (PT100 or PT1000)
MBs Compatible Peripheral	Memory Pack	MBs-PACK	PLC program memory pack with 20K Words program, 20K Words register
	PWMDA Module	PWMDA	10-bit single channel pules width modulation (PWM) 0~10V analog output (AO) module
	RFID Card	CARD-H	General purpose RFID (ISO-14443A Standard) (for MBs-PEPR)
	Simple HMI	MBs-PEP/PEPR	Multi-characters with graphics-based Parameter Entry Panel, built-in RFID Read/Write module with PEPR
	General Purpose Communication Converters	MBs-CM25C	General purpose RS232 to RS485/RS422 communication interface converter with optical isolation
		MBs-CM5R	General purpose RS485 repeater with optical isolation
		MBs-CM5H	General purpose 4 ports RS485 HUB with optical isolation, RS485 can be connected as star connection
	Bluetooth Communication Module	MBs-B2C	Bluetooth Module for PLC Main Unit Port 0
	USB Communication Converter	MBs-U2C-MD-180	Communication converter cable with standard USB AM connector to RS232 Mini-DIN 4M connector (used in standard PC USB to MBs main unit Port0 RS232),
	Port 0 Communication Cables	MBs-232P0-9F-150	Mini-DIN 4M to DB9F communication cable (MBs main unit Port 0 RS232 connect to standard DB9M), length 150cm
		MBs-232P0-9M-400	Mini-DIN 4M to DB9M communication cable (MBs main unit Port 0 RS232 connect to standard DB9F), length 400cm
		MBs-232P0-MD-200	Mini-DIN 4M to Mini-DIN 4M communication cable (MBs main unit Port 0 RS232 connect to MBs-PEP/PEPR), length 200cm
		MBs-232P0-MDR-200	Mini-DIN 4M to 90° Mini-DIN 4M communication cable (MBs main unit Port 0 RS232 connect to MBs-PEP/PEPR), length 200cm
DC24V Power Supply		ADP-24V-1A	90~240VAC Input Voltage, 50/60Hz, Output Voltage: 24VDC, Output Current: 1A, DIN-RAIL Type
		ADP-24V-2A	90~240VAC Input Voltage, 50/60Hz, Output Voltage: 24VDC, Output Current: 2A, DIN-RAIL Type
		ADP-24V-3A	90~240VAC Input Voltage, 50/60Hz, Output Voltage: 24VDC, Output Current: 3A, DIN-RAIL Type
		ADP-24V-4A	90~240VAC Input Voltage, 50/60Hz, Output Voltage: 24VDC, Output Current: 4A, DIN-RAIL Type
		ADP-24V-5A	90~240VAC Input Voltage, 50/60Hz, Output Voltage: 24VDC, Output Current: 5A, DIN-RAIL Type
		ADP-24V-6A	90~240VAC Input Voltage, 50/60Hz, Output Voltage: 24VDC, Output Current: 6A, DIN-RAIL Type

◇: R – Relay output, T. – Transistor SINK (NPN) output, J. – SOURCE (PNP) output
◎: D24 – 21.6~28.8 VDC power supply, AC – 85~264 VAC power supply (customized products)
☆: Blank – Standard case, -S – Slim case (units with AC power supply have no slim case)